Round 4 - Sunday, August 7, 2022

SHOTLINK

Wyndham Championship

REVISED

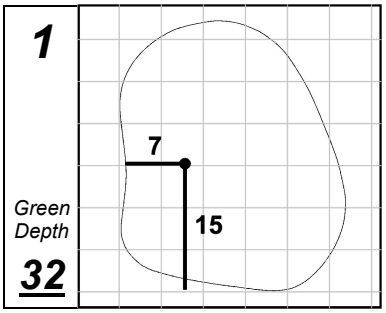

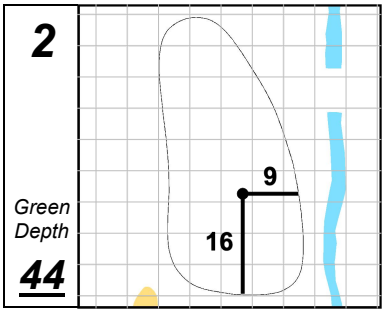

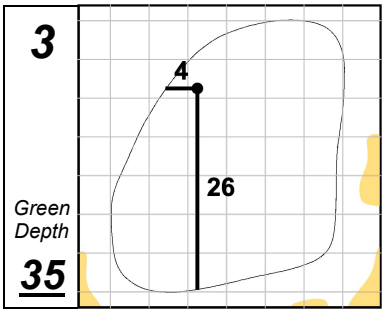

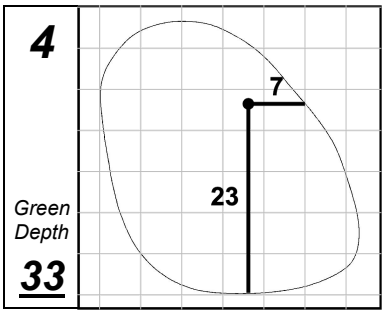

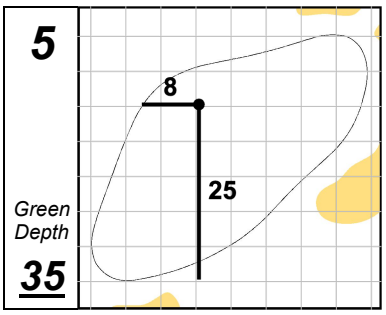

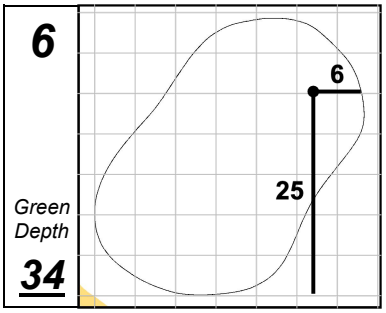

REVISED

Sedgefield Country Club

REVISED

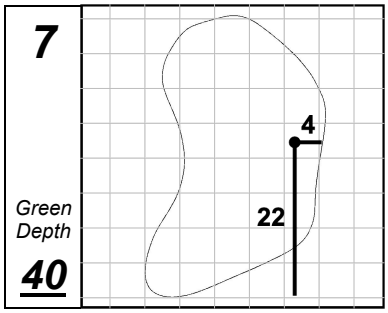

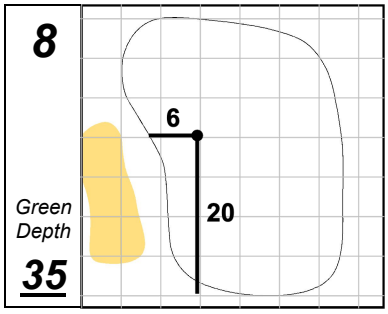

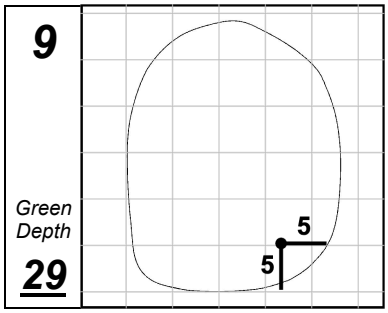

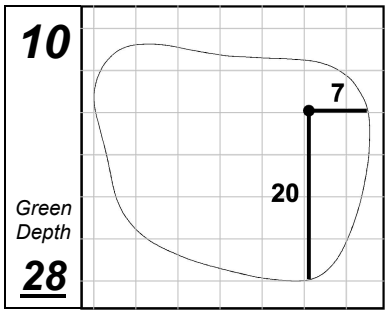

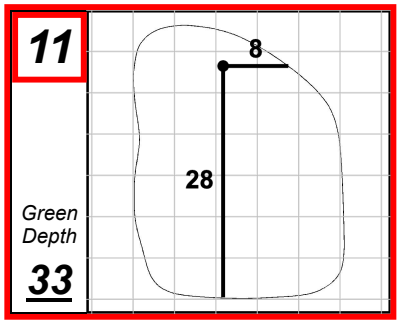

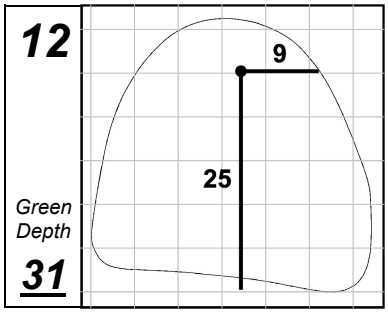

REVISED

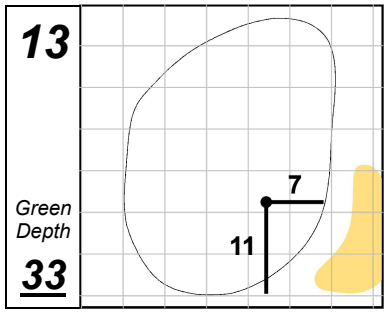

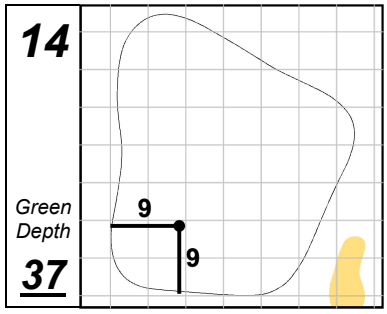

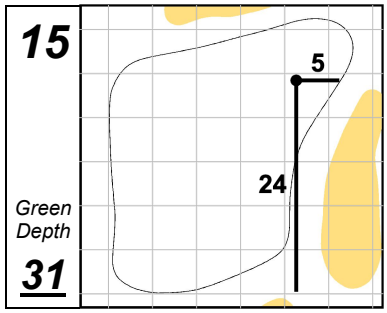

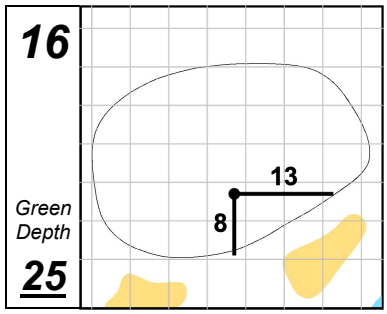

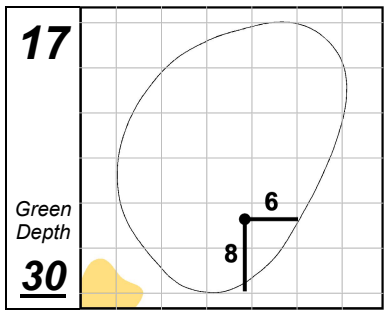

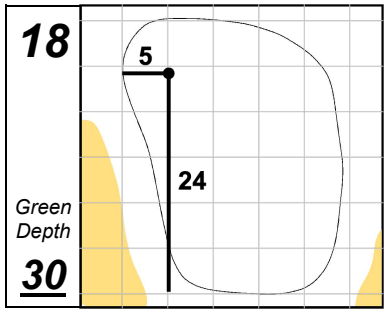

REVISED

Each side of a complete square on the green represents 5 YARDS.

Sunday, August 7, 2022 7:25:34 AM